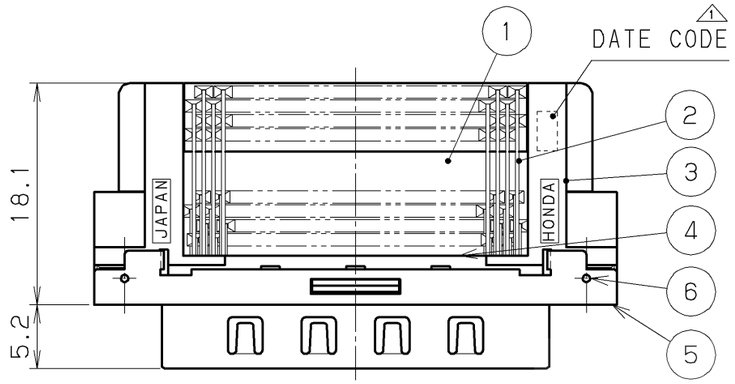

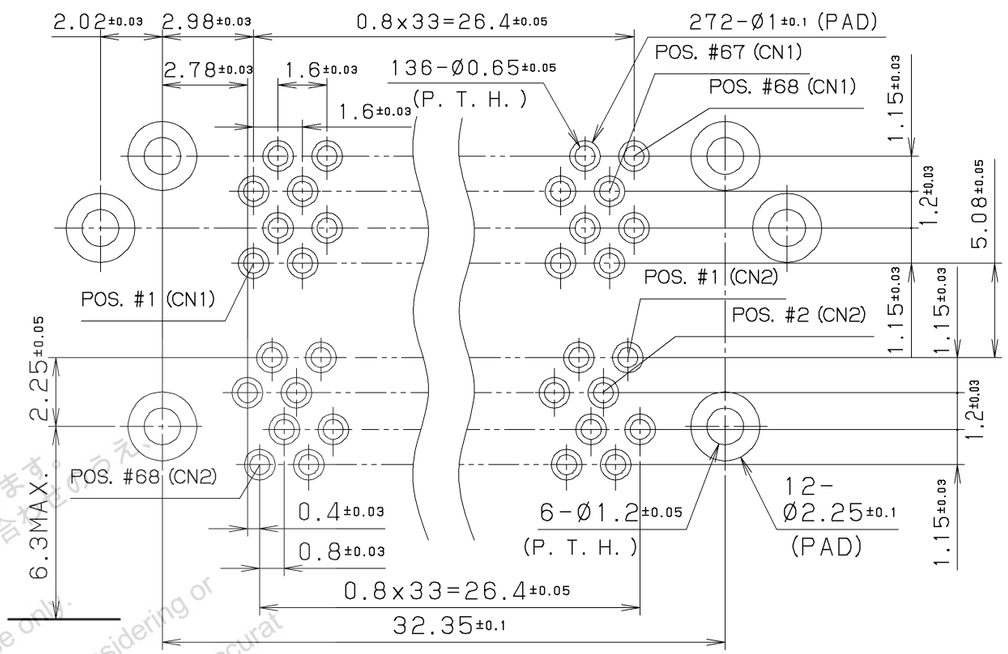

RECOMMENDED P. C. B. LAYOUT t=1.6±0.1 (SCALE=5/1)
(MOUNT SIDE VIEW)

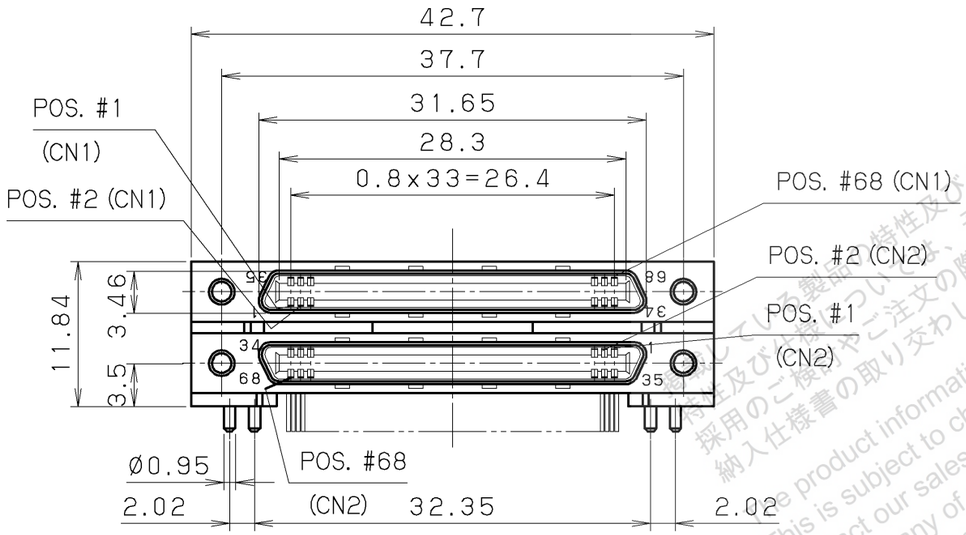

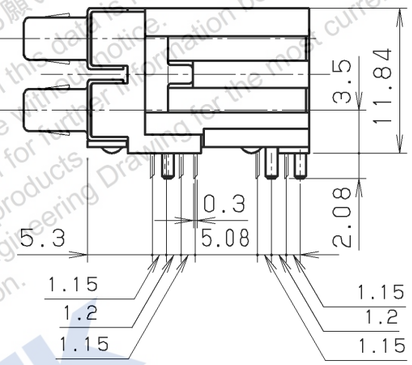

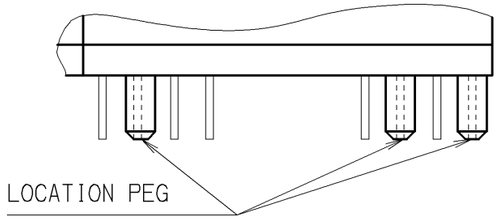

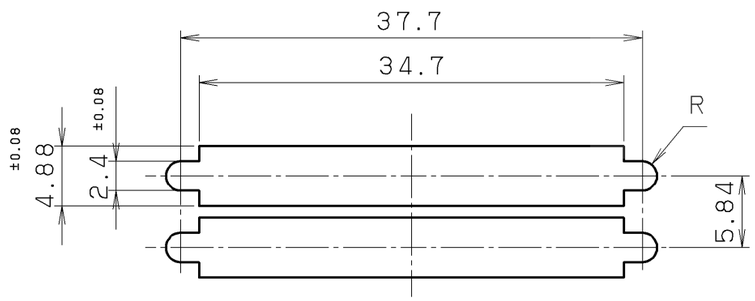

PANEL CUT-OUT DIMENSIONS

NOTE 1. CONTACT PLATING
CONTACT AREA: GOLD 0.1 μm MIN. OVER PALLADIUM/NICKEL 0.5μm
TERMINAL AREA: GOLD 0.05μm
ALL OVER NICKEL UNDERPLATED.

LTR.	DATE	BY	REV. DESCRIPT	No.	PART NAME	MATERIAL	QTY	FINISH	NOTE
				6	SQR. NUT	BRASS	4	NICKEL PLATING	M2x0.4
				5	SHELL	STEEL	2	NICKEL PLATING	———
				4	INSULATOR B	LCP	2	———	UL94V-0 BLACK
3				3	INSULATOR A	PPS	1	———	UL94V-0 BLACK
2				2	CONTACT	PHOSPHOR BRONZE	136	SEE NOTE 1	———
1	Mar.16 2021	S. M	Add DATE CODE	1	BRACKET	PPS	1	———	UL94V-0 BLACK

DATE	SCALE	UNIT	3RD. A. P
Oct.18.2005	2 / 1	mm (INCH)	

APP. DATE&REV.

DR.	DE.	CHK.	CHK.	APP.
S. MURAKAMI	S. MURAKAMI	S. YOSHIDA	———	K. OOAKU

HTK HONDA TSUSHIN KOGYO CO., LTD.

NAME	0.8mm SPACING 68POS. R/A DUAL STACKING FEMALE CONNECTOR	
PART NO.	HDRA-E68W1LFDT+	REV. 1A

ID= HDRA-E68W1LFDT+ EA

本図面は参考値です。製品の特性及び仕様は参考値です。
採用のご検討やご注文の際は弊社担当窓口までお問い合わせください。
納入仕様書の取り交わしをお願いします。
This product information in this data is for reference only.
This is subject to change without notice.
Contact our sales staff for further information before considering or ordering any of our products.
Please request Engineering Drawing for the most current and accurate design information.
HTK