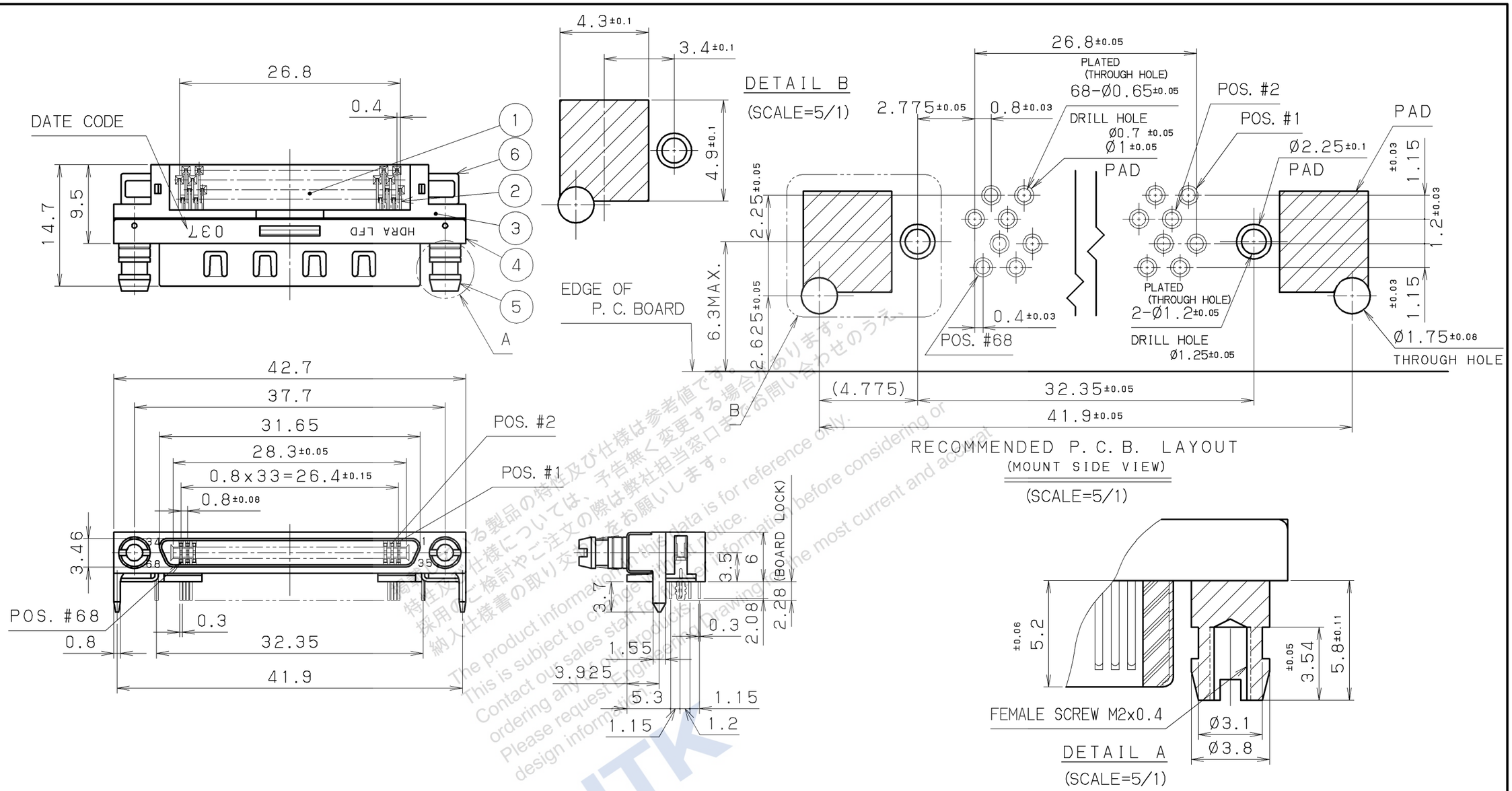

特注及び仕様は参考値です。
採用のご検討やご注文の際は弊社担当窓口までお問い合わせのうえ、
納入仕様書の取り交わしをお願いします。
The product information in this data is for reference only.
This is subject to change without notice.
Contact our sales staff for further information before considering or
ordering any of our products.
Please request Engineering Drawing for the most current and accurate
design information.
HTK

NOTE 1.CONTACT PLATING
CONTACT AREA:GOLD 0.1 μm MIN. OVER PALLADIUM/NICKEL 0.5μm
TERMINAL AREA:GOLD FLASH.
ALL OVER NICKEL UNDERPLATED.

No.	PART NAME	MATERIAL	QTY	FINISH	NOTE
6	HOLD DOWN	PHOSPHOR BRONZE	2	NICKEL	M2x0.4
5	LOCK SCREW	STEEL	2	NICKEL	M2
4	SHELL	STEEL	1	NICKEL	——
3	INSULATOR	PA9T	1	——	UL94V-0 BLACK
2	CONTACT	PHOSPHOR BRONZE	68	SEE NOTE 1	——
1	BRACKET	PPS	1	——	UL94V-0 BLACK

LTR.	DATE	BY	REV. DESCRIPT
3			
2			
1			

DATE	SCALE	UNIT	3RD. A. P
Jun.10.2004	2 / 1	mm (INCH)	

APP. DATE&REV.

DR.	DE.	CHK.	CHK.	APP.
R. DOINAGA	R. DOINAGA	M. KASAHARA	——	S. WATANABE

HTK HONDA TSUSHIN KOGYO CO., LTD.

NAME	0.8mm SPACING 68POS. R/A FEMALE CONNECTOR (ONE MOLD TYPE)
PART NO.	HDRA-EC68LFDT-SLD+ REV.

ID= HDRA-EC68LFDT-SLD+ EA