Table 1

n	Part No.	A±0.2	BRef.
2	HKP-2M5WS	2.54	5.68
3	HKP-3M5WS	5.08	8.22
4	HKP-4M5WS	7.62	10.76
5	HKP-5M5WS	10.16	13.30
6	HKP-6M5WS	12.70	15.84
7	HKP-7M5WS	15.24	18.38
8	HKP-8M5WS	17.78	20.92
9	HKP-9M5WS	20.32	23.46
10	HKP-10M5WS	22.86	26.00
11	HKP-11M5WS	25.40	28.54
12	HKP-12M5WS	27.94	31.08
13	HKP-13M5WS	30.48	33.62
14	HKP-14M5WS	33.02	36.16
15	HKP-15M5WS	35.56	38.70
16	HKP-16M5WS	38.10	41.24
17	HKP-17M5WS	40.64	43.78
18	HKP-18M5WS	43.18	46.32
19	HKP-19M5WS	45.72	48.86
20	HKP-20M5WS	48.26	51.40
21	HKP-21M5WS	50.80	53.94
22	HKP-22M5WS	53.34	56.48
23	HKP-23M5WS	55.88	59.02
24	HKP-24M5WS	58.42	61.56
25	HKP-25M5WS	60.96	64.10
26	HKP-26M5WS	63.50	66.64
27	HKP-27M5WS	66.04	69.18
28	HKP-28M5WS	68.58	71.72
29	HKP-29M5WS	71.12	74.26
30	HKP-30M5WS	73.66	76.80
31	HKP-31M5WS	76.20	79.34
32	HKP-32M5WS	78.74	81.88
33	HKP-33M5WS	81.28	84.42
34	HKP-34M5WS	83.82	86.96
35	HKP-35M5WS	86.36	89.50
36	HKP-36M5WS	88.90	92.04
37	HKP-37M5WS	91.44	94.58
38	HKP-38M5WS	93.98	97.12
39	HKP-39M5WS	96.52	99.66
40	HKP-40M5WS	99.06	102.20
41	HKP-41M5WS	101.60	104.74
42	HKP-42M5WS	104.14	107.28
43	HKP-43M5WS	106.68	109.82
44	HKP-44M5WS	109.22	112.36
45	HKP-45M5WS	111.76	114.90
46	HKP-46M5WS	114.30	117.44
47	HKP-47M5WS	116.84	119.98
48	HKP-48M5WS	119.38	122.52
49	HKP-49M5WS	121.92	125.06
50	HKP-50M5WS	124.46	127.60

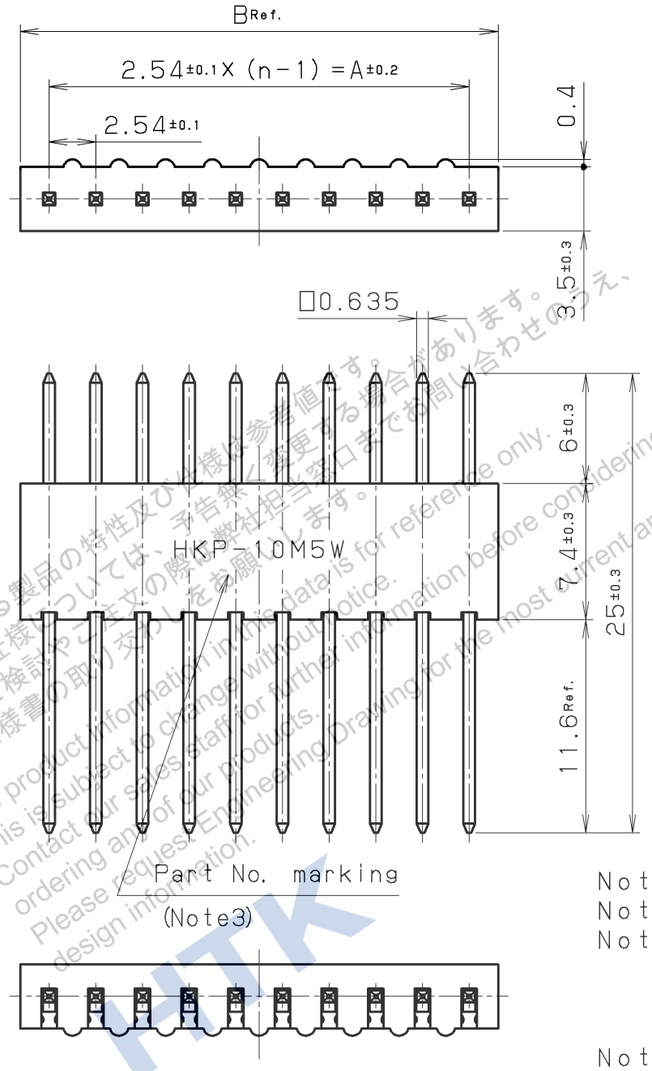

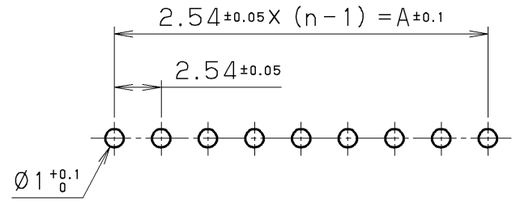

Recommended P.C.B. layout

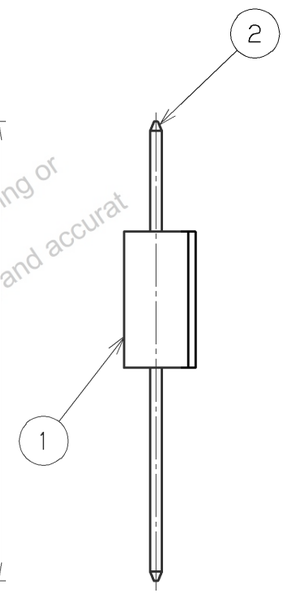

Note1. This figure shows HKP-10M5WS.
Note2. "n" shows number of contacts.
Note3. Marking
HKP-(n)M5W
There is no Part No. marking
on 2, 3 and 4 pos. connectors.
Note4. This connector cuts an insulator
at the B size part and makes a connector.

LTR.	DATE	BY	REV. DESCRIPT	No.	PART NAME	MATERIAL	QTY	FINISH	NOTE
3									
2				2	Contact	Phosphor Bronze	n	Gold plating	———
1	070806	M. M	REVISE	1	Insulator	PBT	1	———	UL94V-0 Black

DATE	SCALE	UNIT	3RD. A. P
May.16 (2005)	3/1	mm (INCH)	
APP. DATE&REV.			

DR.	DE.	CHK.	CHK.	APP.
M.MIYAZAKI	M.MIYAZAKI	———	S.IIJIMA	K.KASHIO

HONDA TSUSHIN KOGYO CO., LTD.

NAME	Male connector	
PART NO.	HKP-( )M5WS	REV. 1A

掲載している製品の特性及び仕様は参考値です。
特性及び仕様については、予告無く変更する場合があります。
採用のご検討やご使用の際は弊社担当窓口までお問い合わせのうえ、
納入仕様書の取り交わしをお願いします。
The product information in this data is for reference only.
This is subject to change without notice.
Contact our sales staff for further information before considering or
ordering any of our products.
Please request Engineering Drawing for the most current and accurat
design information.
HTK

ID= HKP-@M5WS EA