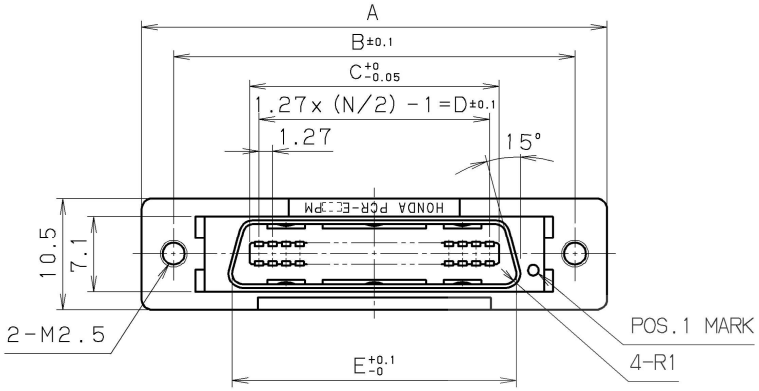

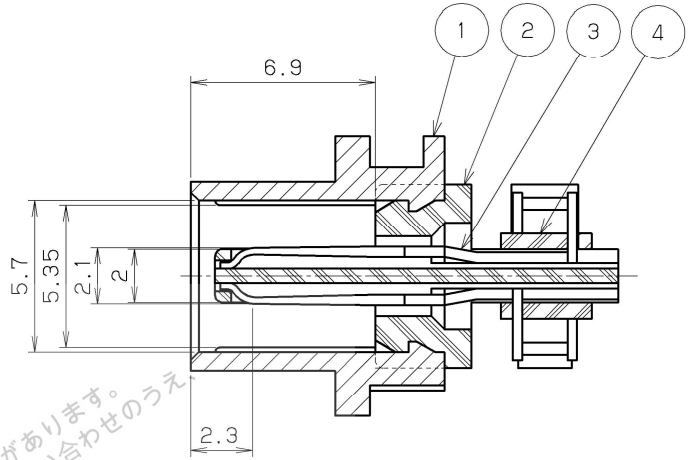

CONTACT DETAIL
(5/1)

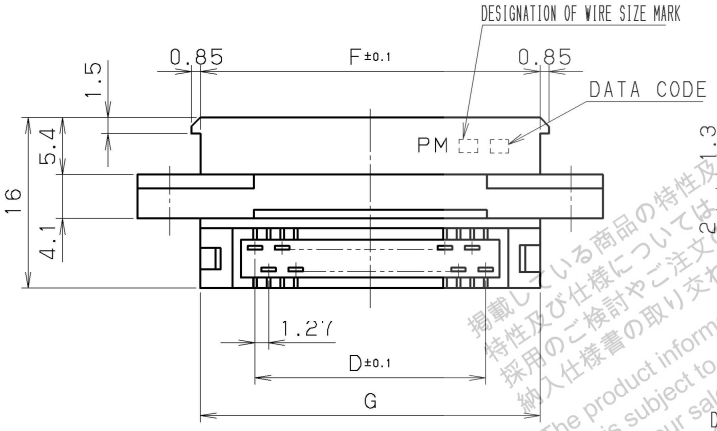

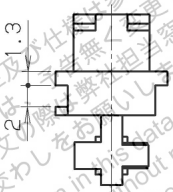

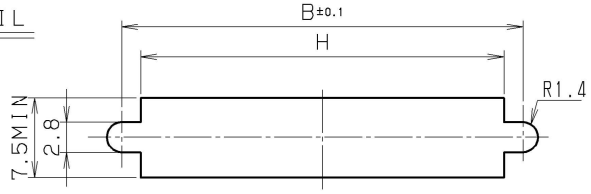

PANEL CUT DIMENSION
(REFERENCE)

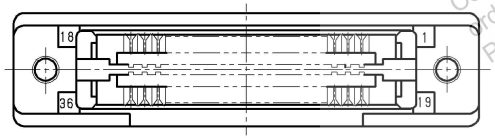

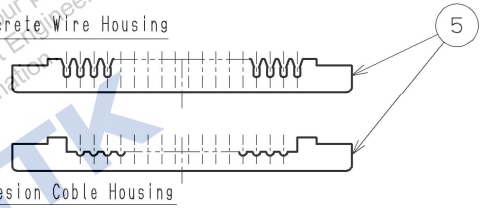

PART No.	Applicable Wire Size	WIRE SIZE MARK
PCR-E ( ) PMD	#30AWG (7/0.1) Cohesion Coble	PMD
PCR-E ( ) PMC	#28AWG (7/0.127) #30AWG (1/0.254) Cohesion Coble	PMC
PCR-E ( ) PMB	#30AWG (7/0.1) Discrete Wire Housing Ø0.5~Ø0.65	PMB
PCR-E ( ) PMA	#28AWG (7/0.127) #30AWG (1/0.254) Discrete Wire Housing Ø0.5~Ø0.65	PMA
PCR-E ( ) PM	#28AWG (7/0.127) #30AWG (1/0.254) Discrete Wire Housing Ø0.8~Ø1.0	PM

TABLE 1

PART NO.	A	B	C	D	E	F	G	H	N	C/T NO. MARK
PCR-E20PM( )	33.40	27.40	13.20	11.43	16.45	21.60	21.65	23.8	20	1, 10, 11, 20
PCR-E28PM( )	38.48	32.48	18.28	16.51	21.53	26.68	26.7	28.9	28	1, 14, 15, 28
PCR-E36PM( )	43.56	37.56	23.36	21.59	26.61	31.76	31.8	34.0	36	1, 18, 19, 36
PCR-E50PM( )	52.45	46.45	32.25	30.48	35.50	40.65	40.7	42.9	50	1, 25, 26, 50
PCR-E68PM( )	63.88	57.88	43.68	41.91	46.93	52.08	52.1	54.6	68	1, 34, 35, 68
PCR-E96PM( )	81.66	75.66	61.46	59.69	64.71	69.86	69.9	72.1	96	1, 48, 49, 96

LTR.	DATE	BY	REV. DESCRIPT	No.	PART NAME	MATERIAL	QTY	FINISH	NOTE
3				5	CABLE HOUSING	PBT (GF)	2	———	UL94V-0 BLACK
2				4	SPEACER	PBT (GF)	2	———	UL94V-0 BLACK
1	Aug.6 2019	T. M	Revise	3	CONTACT	PHOSPHOR BRONZE	N	CONTACT AREA GOLD PLATING	TERMINAL AREA GOLD PLATING △1
				2	INSULATOR	PBT (GF)	1	———	UL94V-0 BLACK
				1	SHELL	ZINC DIE CASTING	1	Ni PLATING	———

DATE	SCALE	UNIT	3RD. A. P
JUL.07.1998	2/1	mm (INCH)	
APP. DATE&REV.			

DR.	DE.	CHK.	CHK.	APP.
T.MASUNO	T.MASUNO	S.YOSHIDA	———	Y.KATO

HTK HONDA TSUSHIN KOGYO CO., LTD.

NAME: 1.27mm SPACING MALE CONNECTOR FOR PANEL MOUNT TYPE

PART NO.: PCR-E ( ) PM ( ) REV. 1A

ID= PCR-E@PM@ EA

掲載している商品の特性及び仕様は参考値です。
特性及び仕様については、予告無く変更する場合があります。
採用のご検討やご注文の際は、弊社担当窓口までお問い合わせのうえ、
納入仕様書の取り交わしをお願いします。
The product information in this data is for reference only.
This is subject to change without notice.
Contact our sales staff for further information before considering or ordering any of our products.
Please request Engineering Drawing for the most current and accurate design information.
HTK