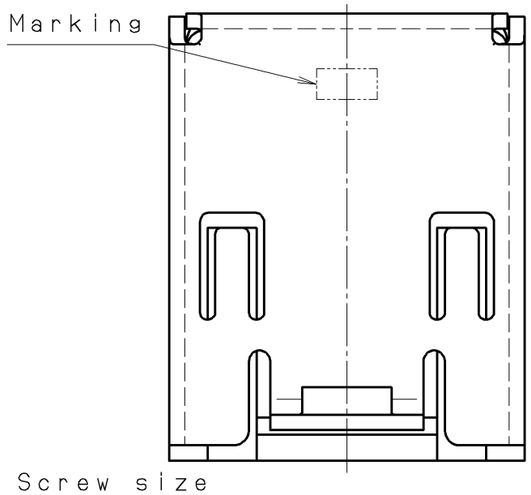

Table 1: Housing color and key code △3

Part no.	Insulator color	Key code	Mating plug part no.
TAK-A6LMDGBB-AB+	Black	1±0.05 / 1.1 +0.1 0	TAK-A6SFCGB-A( )+
TAK-A6LMDGAB-BB+	Blue	1.1 +0.1 0	TAK-A6SFCGA-B( )+
TAK-A6LMDGCB-CB+	Brown	1±0.05 / 1.1 +0.1 0	TAK-A6SFCGC-C( )+

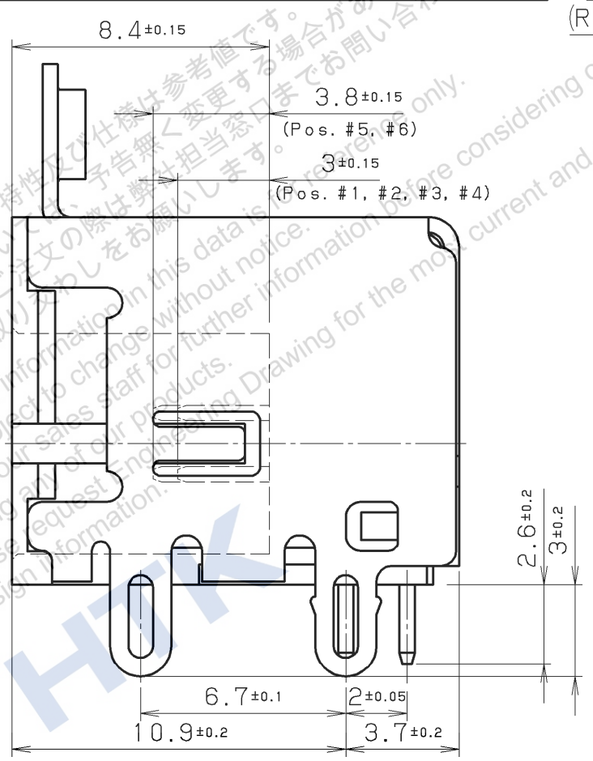

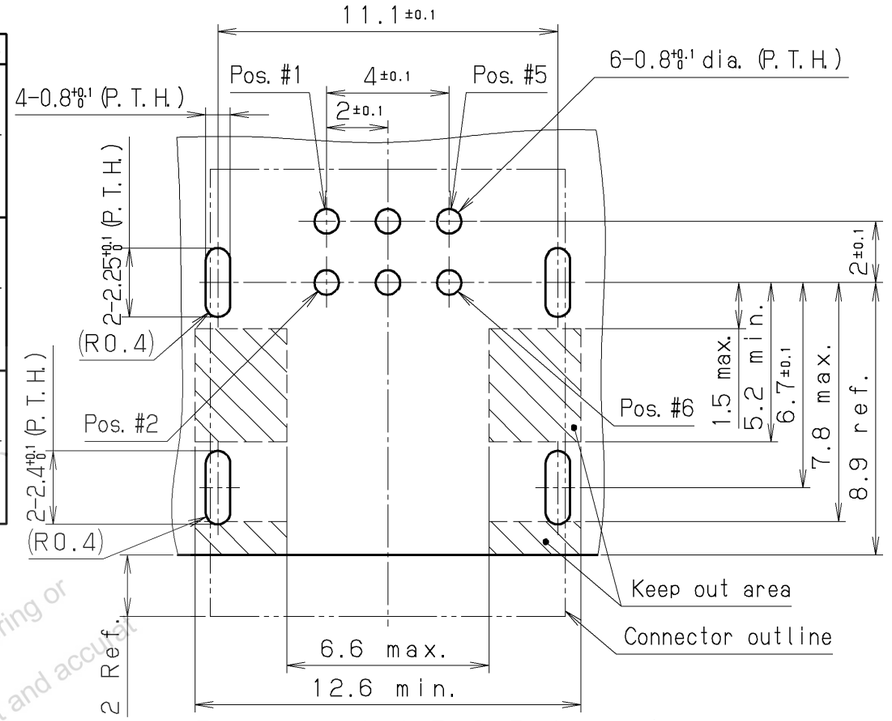

Recommended P.C.B layout
P.C.B thickness:1.2mm~1.6mm
(Connector side)

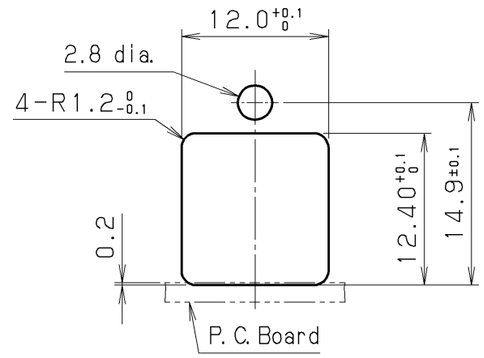

Panel opening size
(Recommended panel thickness: 1.0mm)

LTR.	DATE	BY	REV. DESCRIPT	No.	PART NAME	MATERIAL	QTY	FINISH	NOTE
				4	Ground contact	Stainless steel	1	Nickel plating	———
△3	Jan.21 2010	T. K	Add. housing color and key code	3	Shell	Steel	1	Nickel plating	———
△2	May.8 2008	T. S	Changed shape, revise	2	Contact	Copper alloy	6	Gold plating	———
△1	Jan.11 2008	T. S	Changed dim.	1	Insulator	PBT (GF)	1	———	UL94V-0 See table #1

DATE	SCALE	UNIT	3RD. A. P
Nov.14.2007	5/1	mm (INCH)	

APP. DATE&REV.

DR.	DE.	CHK.	CHK.	APP.
T. KAWANO	T. KAWANO	H. AIZAWA	T. SATO	K. KASHIO

HONDA TSUSHIN KOGYO CO., LTD.

NAME: 6 pos. receptacle connector (RoHS)

PART NO.: △3 TAK-A6LMDG( )B-( )B+ REV. 3C

RoHS compliant

掲載している商品の特性及び仕様は参考値です。
特性及び仕様については、予告無く変更する場合があります。
採用のご検討やご注文の際は弊社担当窓口までお問い合わせのうえ、
納入仕様書の取り交わしをお願いします。
The product information in this data is for reference only.
This is subject to change without notice.
Contact our sales staff for further information before considering or
ordering any of our products.
Please request Engineering Drawing for the most current and accurate
design information.
HTK

ID= TAK-A6LMDG@B-@B+ EC